EUREKA

Training and courses

2016

Eureka Pumps and Generator sets

Part of //ALIGN

EUREKA PUMPS AS
Oksenøyveien10, NO-1366 Lysaker. Norway, Phone: +47 815 31 002. Fax: +47 815 31 003. Enterprise no.: NO 979 479 875 MVA
www.eureka.no

Pump training modules

Module 001:
Pumps in general, elementary course.
For operators, mechanics and service technicians.

Module 002:
Pumps in general, elementary course.
For purchasers of pumps and pump parts.

Module 003:
Pumps in general, secondary course.
For operators, mechanics and service technicians.

Module 004:
Pumps in general, secondary course.
For engineers and technical personnel.

Module 005:
Performance testing and API 610 pump requirements.

Module 006:
Pump and driver alignment, horizontal – or vertical assembly.
Principles for connection between pump and driver.

Module 007:
Sealing devices and support systems.

EUREKA PUMPS AS
Oksenøyveien10, NO-1366 Lysaker. Norway, Phone: +47 815 31 002. Fax: +47 815 31 003. Enterprise no.: NO 979 479 875 MVA
www.eureka.no

Pump training modules

Module 008:
Submersible electrical pump-drivers.

Module 009:
Eureka seawater lift and firewater pumps.

Module 010:
Eureka water injection pumps.

Module 011:
Eureka cargo pumps.

Module 012:
Eureka generator packages.
For operators.

Module 013:
Eureka generator packages.
For mechanics and service technicians

EUREKA PUMPS AS
Oksenøyveien10, NO-1366 Lysaker. Norway, Phone: +47 815 31 002. Fax: +47 815 31 003. Enterprise no.: NO 979 479 875 MVA
www.eureka.no

Module 001:

Pumps in general, elementary course.
For operators, mechanics and service technicians.

2 days mix of basic theory and practical training.

Different types of displacement pumps are shown, but the main focus is on centrifugal pumps theory, bearings theory and seals. The practical training is disassembly and assembly of a small centrifugal pump, Practical training on pump with throttle valves on suction and pressure side. Training with different methods of fastening /loosening bearings and laser alignment of motor-pump.

EUREKA PUMPS AS
Oksenøyveien10, NO-1366 Lysaker. Norway, Phone: +47 815 31 002. Fax: +47 815 31 003. Enterprise no.: NO 979 479 875 MVA
www.eureka.no

Module 002:

Pumps in general, elementary course.
For purchasers of pumps and pump parts.

1 day mix of basic theory and practical training.

This is the most elementary module, meant as an introduction for people with little or no experience with pumps. The most important components like impellers, shafts seals, wear rings and bearings are pointed out and explained.

EUREKA PUMPS AS
Oksenøyveien10, NO-1366 Lysaker. Norway, Phone: +47 815 31 002. Fax: +47 815 31 003. Enterprise no.: NO 979 479 875 MVA
www.eureka.no

Module 003:

Pumps in general, secondary course.
For operators, mechanics and service technicians.

This is pure theory. Going through pump types, Pump operations, materials, upgrades, pump design, pump curves and maintenance.

Typically this course will deal with velocity diagrams, P&ID's, Datasheets and disclose how a pump manufacturer thinks and the toolbox he holds.

EUREKA PUMPS AS
Oksenøyveien10, NO-1366 Lysaker. Norway, Phone: +47 815 31 002. Fax: +47 815 31 003. Enterprise no.: NO 979 479 875 MVA
www.eureka.no

Module 004:

Pumps in general, secondary course.
For engineers and technical personnel.

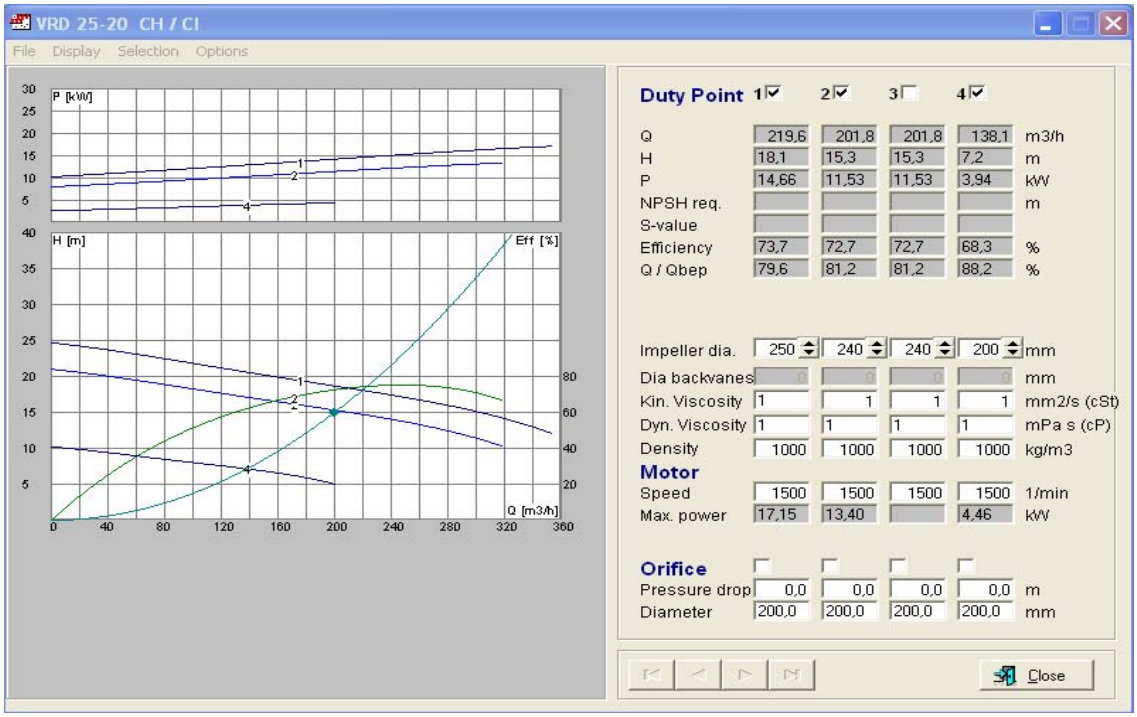

2 day course.

This has much the same agenda as course 3, but it is directed more towards engineers and is diving even more into the theoretical issues. Course 3 and 4 may be held together.

EUREKA PUMPS AS
Oksenøyveien10, NO-1366 Lysaker. Norway, Phone: +47 815 31 002. Fax: +47 815 31 003. Enterprise no.: NO 979 479 875 MVA
www.eureka.no

Module 005:

Performance testing and API 610 pump requirements.

1 day course.

Have look how a pump is tested acc. API 610, ISO 9906 and learn about other requirements. This course is meant to take place when we have a pump ready for test in our test facilities.

EUREKA PUMPS AS
Oksenøyveien10, NO-1366 Lysaker. Norway, Phone: +47 815 31 002. Fax: +47 815 31 003. Enterprise no.: NO 979 479 875 MVA
www.eureka.no

Module 006:

Pump and driver alignment, horizontal – or vertical assembly.
Principles for connection between pump and driver.

1 day course.

Alignment on site is a critical issue and can be difficult to understand. This is a basic course using both laser equipment and dial indicators

Theory and practical training

EUREKA PUMPS AS
Oksenøyveien10, NO-1366 Lysaker. Norway, Phone: +47 815 31 002. Fax: +47 815 31 003. Enterprise no.: NO 979 479 875 MVA
www.eureka.no

Module 007:

Sealing devices and support systems.

1 day course.

Basic principles of a mechanical seal
API 682 solutions.

Theory with practical examples

EUREKA PUMPS AS
Oksenøyveien10, NO-1366 Lysaker. Norway, Phone: +47 815 31 002. Fax: +47 815 31 003. Enterprise no.: NO 979 479 875 MVA
www.eureka.no

Module 008:

Submersible electrical pump-drivers.

1 day course.

Theoretical training.

Rotor, stator, bearings, cooling, coupling, sealing, header tank, cable, performance.

EUREKA PUMPS AS
Oksenøyveien10, NO-1366 Lysaker. Norway, Phone: +47 815 31 002. Fax: +47 815 31 003. Enterprise no.: NO 979 479 875 MVA
www.eureka.no

Module 009:

Eureka seawater lift and firewater pumps.

2 day course

Theoretical course, hopefully included a trip in the workshop, where some SWL or FW pumps can be observed.
Pump configuration, design, maintenance, assembly, disassembly, troubleshooting, performance, drivers, general pump theory

EUREKA PUMPS AS
Oksenøyveien10, NO-1366 Lysaker. Norway, Phone: +47 815 31 002. Fax: +47 815 31 003. Enterprise no.: NO 979 479 875 MVA
www.eureka.no

Module 010:

Eureka water injection pumps.

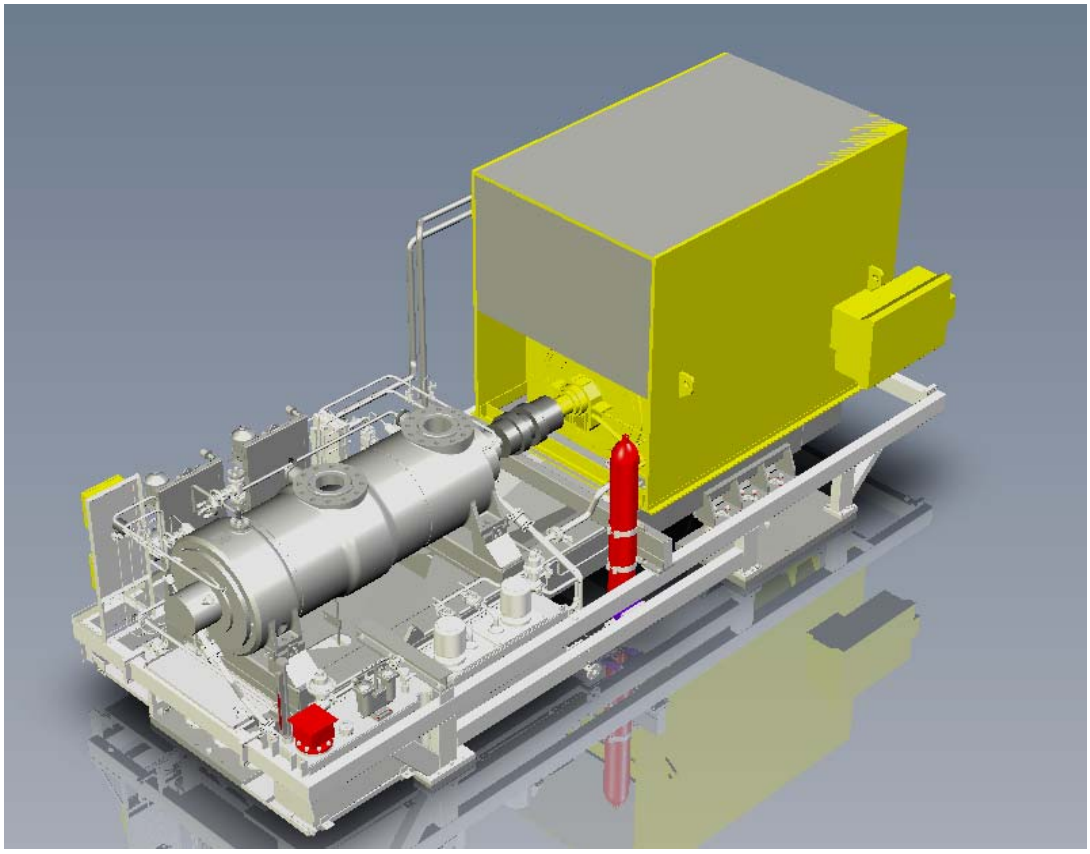

2 day course.

High energy pump design, specialties, rotor dynamics, performance, maintenance, drivers, gears, VSD, P&ID, start-up sequence

EUREKA PUMPS AS
Oksenøyveien10, NO-1366 Lysaker. Norway, Phone: +47 815 31 002. Fax: +47 815 31 003. Enterprise no.: NO 979 479 875 MVA
www.eureka.no

Module 011:

Eureka cargo pumps.

1 day course.

Design, Performance, maintenance, assembly, disassembly

EUREKA PUMPS AS
Oksenøyveien10, NO-1366 Lysaker. Norway, Phone: +47 815 31 002. Fax: +47 815 31 003. Enterprise no.: NO 979 479 875 MVA
www.eureka.no

Module 012:

Eureka diesel generator packages.
For operators.

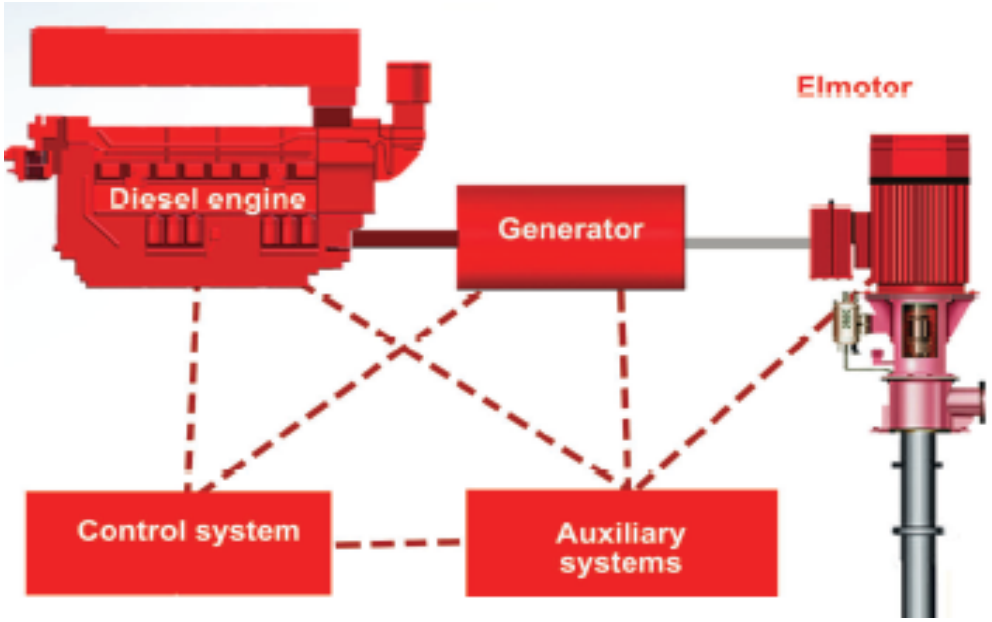

1 day course.

General theoretical course in design, operation and maintenance of:
Diesel engine
Generator
Control system

Eureka is of the opinion that electricians should have their one training in this discipline. With more wiring diagrams and P&ID's. This will be a 2 days training session

EUREKA PUMPS AS
Oksenøyveien10, NO-1366 Lysaker. Norway, Phone: +47 815 31 002. Fax: +47 815 31 003. Enterprise no.: NO 979 479 875 MVA
www.eureka.no

Module 013:

Eureka diesel generator packages.
For mechanics and service technicians**.**

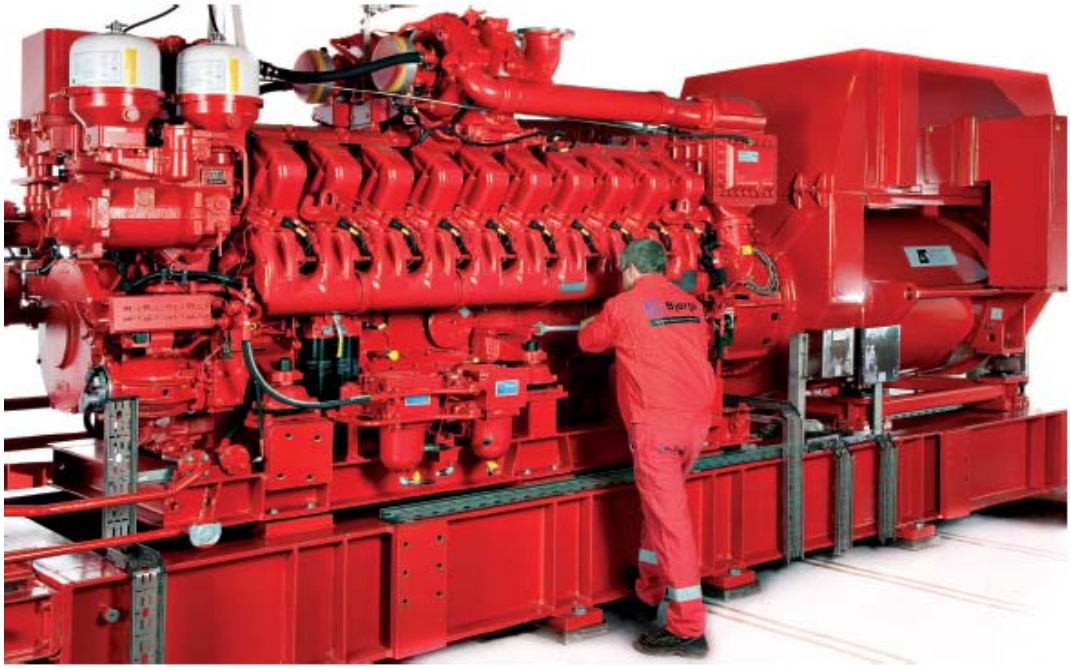

1 day course.

General theoretical course in design, operation and maintenance of:
Diesel engine
Generator

This training is much like module 12, but concentrates on the mechanical parts

EUREKA PUMPS AS
Oksenøyveien10, NO-1366 Lysaker. Norway, Phone: +47 815 31 002. Fax: +47 815 31 003. Enterprise no.: NO 979 479 875 MVA
www.eureka.no

Module 000:

Product specific courses.

Eureka Pumps can offer training for every pump delivered.
The price of training will vary with the scope.

EUREKA PUMPS AS
Oksenøyveien10, NO-1366 Lysaker. Norway, Phone: +47 815 31 002. Fax: +47 815 31 003. Enterprise no.: NO 979 479 875 MVA
www.eureka.no

Course locations and opportunities

Theoretical and practical training courses are delivered at our locations at Råde, Stavanger, Kristiansund, Hammerfest and Sørumsand. The training at the main office at Fornebuporten will be just theoretical, since there are no workshop available there.

Training is also carried out on offshore installations or at the customer's onshore premises.

The prices indicated in this presentation is for buying an entire training. Lunch is included but no accommodation. The max. number of participants pr. course is 15.

EUREKA PUMPS AS
Oksenøyveien10, NO-1366 Lysaker. Norway, Phone: +47 815 31 002. Fax: +47 815 31 003. Enterprise no.: NO 979 479 875 MVA
www.eureka.no